Product Reference

XA(H,T,V)S 350-450 T2 WUX

Portable Compressor

Standard Scope of Supply

The Atlas Copco XAS 400, XATS 350, XAHS 350, XAVS 450 and XAHS 450 are a silenced, single-stage, oil-injected screw compressors, powered by liquid-cooled, four and six-cylinder Cummins diesel engine.

The unit consist of a high efficient compressor element, diesel engine, cooling, air/oil separation and control systems - all enclosed within a sound dampened power coated steel enclosure.

Special attention has been given to the overall product quality, user friendliness, ease of serviceability, and economical operation to ensure best in class cost of ownership

Available Models

XAS 400	Single Stage – 410 cfm@100 psi – Cummins Diesel Engine
XATS 350	Single Stage – 360 cfm@150 psi – Cummins Diesel Engine
XAHS 350	Single Stage – 360 cfm@175 psi – Cummins Diesel Engine
XAVS 450	Single Stage – 441 cfm@200 psi – Cummins Diesel Engine
XAHS 450	Single Stage – 441 cfm@175 psi – Cummins Diesel Engine

Features

- Cummins mechanical Tier 2 engine
- Simple instrument panel
- Optimized vessel cover
- Top mounted muffler
- Additional fuel filter as standard
- Extra cooling capacity for hot environment
- Integrated top tank
- Safety cartridge as standard

Benefits

- Easy for maintenance
- Ease of operation and diagnostics
- Save 1 hour for OSE change
- Less fire risk
- Work in bad fuel quality areas
- Work in high ambient temperature up to 50 ℃
- Less leakage risk
- Security for tough applications

Technical data basic unit*

Model		XAS 400	XATS 350	XAHS 350	XAVS 450	XAHS 450
Normal effective working pressure	bar	7	10.3	12	14	12
Absolute inlet pressure	bar	1	1	1	1	1
Relative air humidity	%	0	0	0	0	0
Air inlet temperature	°C	20	20	20	20	20
Minimum effective receiver pressure	bar	4	4	4	4	4
Maximum effective receiver pressure (Unloaded)	bar	8.5	11.8	13.5	15.5	15.5
Actual free air delivery	l/s	191	166	166	208	208
Fuel consumption						
at full load	kg/h	19.4	20.4	20.4	31.2	27.9
at unload	kg/h	7.16	8.88	8.88	12.12	12.12
Maximum typical oil content of compressed air	mg/m³	<5	<5	<5	<5	<5
Max. sound pressure level (Lw @ 2000/14/EC)	dB(A)	-	-	-	-	-
Max. sound pressure level (Lp @ ISO 2151)	dB(A)	80±3	80±3	80±3	80±3	80±3
Max. compressed air temperature at outlet valves	°C	90	90	90	90	90
Max. ambient temperature at sea level with	°C	50	50	50	50	50
Min. starting temperature with cold weather	°C	-20	-20	-20	-20	-20
Min. starting temperature without cold weather	°C	-10	-10	-10	-10	-10
Number of compression stages		1	1	1	1	1

Engine		Cummins	Cummins
Type		4BTAA3.9-C125	6BTAA5.9-C180
Coolant		Coolant	Coolant
Number of cylinders		4	6
Bore	mm	102	102
Stroke	mm	120	120
Swept volume	l	3.9	5.9
Full Load	rpm	2300	2400
Unload	rpm	1600	1500
Power output @ normal shaft speed	kW	93	132
Capacity of oil sump	l	10	16.3
Capacity of cooling system	l	8.3	26
Capacity of compressor oil system	l	24	26.5
Net capacity of air receiver	l	42	42
Air volume at inlet grating (approx.)	m^3/s	6.3	6.5
Capacity of standard fuel tanks	l	175	175
Dimensions: Box unit (L x W x H)	mm	2458 x 1350 x 1525	2800 x 1400 x 1600
Weight - Wet	kg	1600	1825
Dimensions: Undercarriage (L x W x H)	mm	4120 x 1890 x 1991	4140 x 1940 x 2141
Weight - Wet	kg	1700	2000

Dimensions

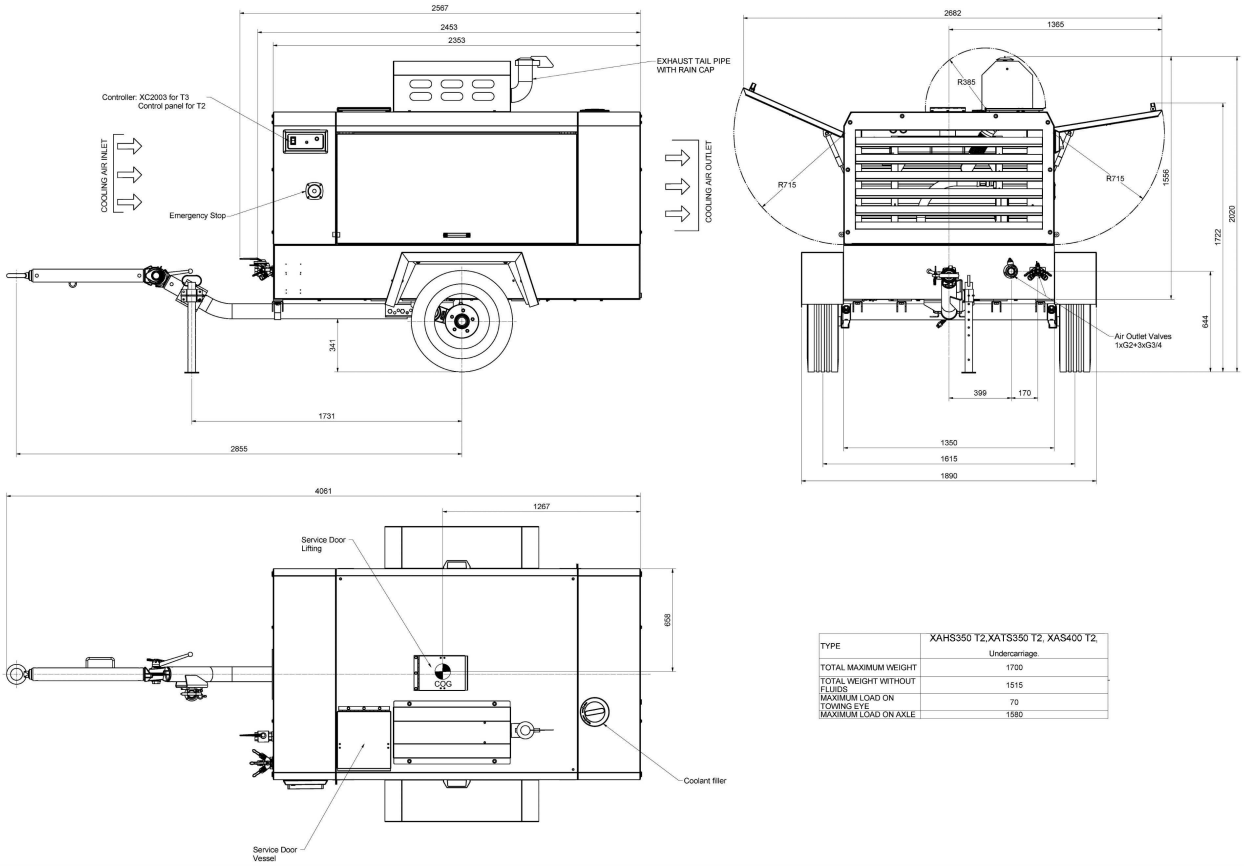

TYPE	XAHS350 T2,XATS350 T2, XAS400 T2, Undercarriage
TOTAL MAXIMUM WEIGHT	1700
TOTAL WEIGHT WITHOUT FLUIDS	1515
MAXIMUM LOAD ON TOWING EYE	70
MAXIMUM LOAD ON AXLE	1580

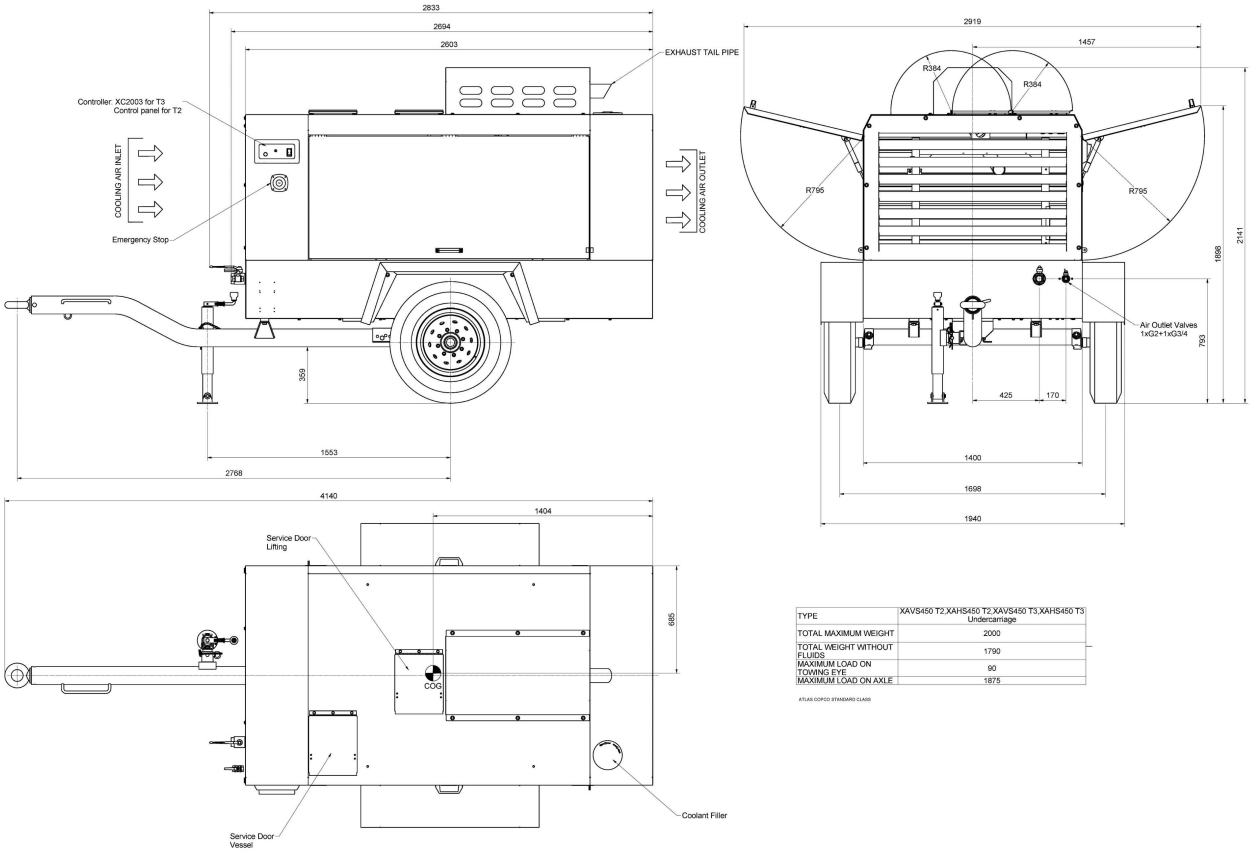

TYPE	XAVS450 T2,XAHS450 T2,XAVS450 T3,XAHS450 T3 Undercarriage
TOTAL MAXIMUM WEIGHT	2000
TOTAL WEIGHT WITHOUT FLUIDS	1790
MAXIMUM LOAD ON TOWING EYE	90
MAXIMUM LOAD ON AXLE	1875

ATLAS COPCO STANDARD CLASS

Principle Data

Compressor Element

The quality of a compressor can be measured through the reliability, efficiency and du
expertise in the design of compressor elements, the result is the production of most e

Air/Oil Separator

Air and oil separation is achieved through a centrifugal oil separator combined with a

Designed for a higher maximum working pressure, the separator is equipped with a s
valve, automatic blow-down valve, and pressure regulator.

Cooling System

The engine is provided with a liquid-cooler and intercooler and the compressor is provided with an oil cooler. The cooling air is generated by a fan, driven by the engine. The cooling system is suitably designed for continuous operation in ambient conditions up to +50°C, with all canopy doors closed.

Compressor Regulating System

The compressor regulating system consists of air filter, air receiver/oil separator, compressor element, unloader assembly with unloader

valve, blow down valve and loading valve.

Economical power consumption is assured by the fully automatic step-less speed regulator that adapts engine speed to air demand.

Discharge Outlets

Compressed air is available from 1 x G1½ and 3 x G¾ outlet valves.

Engine

Cummins Diesel Engine

The compressor is driven by a liquid-cooled, four-cylinder 4BTAA3.9-C125 and six-cylinder 6BTAA5.9-C180 diesel engines. The engine's power is transmitted to the compressor element through a heavy-duty coupling.

Electrical System

The XAS 400, XATS 350, XAHS 350, XAVS 450 and XAHS 450 are equipped with a 24-volt negative ground electrical system.

Instrumentation

The instrument control panel is placed in the center at the rear end.

The display will show i.e. the following information: Start/Stop Button, Load button, Pressure gauge, Hour meter, Fuel gauge and Oil temperature indicator. and LED diagnostic warning & shutdown lamps.

Starting is achieved with a three-position switch for ease of operation.

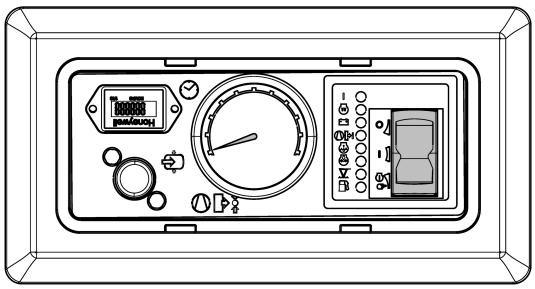

Safety Devices

The compressor is standard equipped with safety devices for the compressor and the engine. The unit will be completely turned off should:

- Engine oil temperature rise too high
- Engine oil pressure drop too low
- Outlet temperature of the compressed air goes outside a specified range.
- Low fuel level

The main switch is a protection against unintended starting of the compressor.

Bodywork

The compressor is delivered as standard with a zinc coated steel canopy with powder coat paint finish providing excellent corrosion protection. The canopy is sound attenuated to meet the most current legal noise requirements. Wide doors provide complete service access to all components.

Manufacturing & Environmental Standards

The XAS 400, XATS 350, XAHS 350, XAVS 450 and XAHS 450 are manufactured following stringent ISO 9001 regulations, and by a fully implemented Environmental Management System fulfilling ISO 14001 requirements. Attention has been given to ensure minimum negative impact to the environment.

Supplied Documentation

The unit is delivered with the following documents and certificates:

- Spare parts list for compressor.
- Instruction manual for both compressor and engine.
- Machine test certificate
- Vessel certificate.

Warranty Coverage

- Please refer to product presentation for warranty info.
- Extended Warranty Programs are available; please contact your local sales representative for more info.

*** Note:** Due to continuous improvements in the products, the technical specifications are subject to change without prior notice.